elastimold Product Specifications

ALL	200A Loadbreak Long Bi-Metal Contact	02500XXX

02500XXX bi-metallic connectors consist of a copper tip section and a universal aluminum crimp barrel for aluminum or copper conductor. Units are designed for use with **161/162LR, 261/262LR, 375/376LR,** and **252LR** elbows on aluminum or copper conductors.

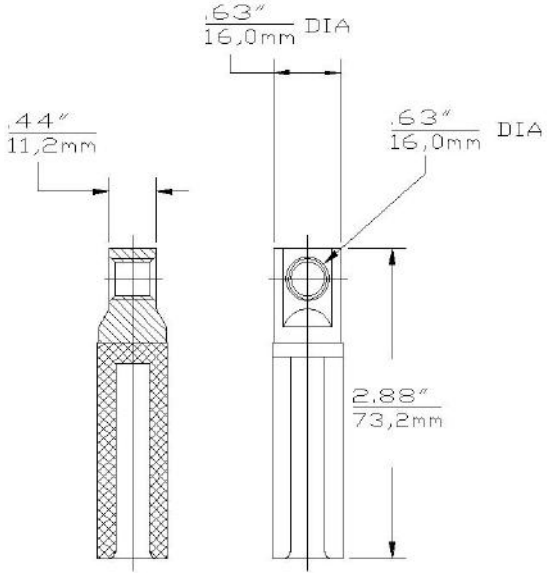

Each kit contains the following:

1	Connector	02500XXX
1	Crimp Chart	CC-0020

Ordering Instructions:

XXX Code	Conductor Size AWG or kcmil		Connector only
	Strand./ Compr.	Solid/ Comp.	Bi-Metal
190		#4	02500190
200	#4	#3	02500200
210	#3	#2	02500210
220	#2	#1	02500220
230	#1	1/0	02500230
240	1/0	2/0	02500240
250	2/0	3/0	02500250
260	3/0	4/0	02500260
270	4/0	250	02500270

8155 T&B Boulevard, Memphis, TN 38125

901-252-5000, FAX 901-252-1331

www.tnb.com

Thomas&Betts
A Member of the ABB Group